Magnetic Resonance Imaging 125 (2026) 110551

Contents lists available at ScienceDirect

Magnetic Resonance Imaging

journal homepage: www.elsevier.com/locate/mri

Fast unconditional diffusion model for accelerated MRI reconstruction☆

Guijiao Zhao [a], Chen Zhou [b], Jianxing Liu [c], Yue Hu [b,*], Peng Li [b,*]

[a] Department of Magnetic Resonance Imaging Diagnosis, The Second Affiliated Hospital of Harbin Medical University, Harbin, China
[b] The School of Electronics and Information Engineering, Harbin Institute of Technology, Harbin, China
[c] The Department of Control Science and Engineering, Harbin Institute of Technology, Harbin, China

ARTICLE INFO

Keywords:
Magnetic resonance imaging
Diffusion model
MRI reconstruction

ABSTRACT

Accelerated magnetic resonance imaging (MRI) reconstruction from undersampled *k*-space data is a challenging inverse problem that has attracted significant attention in the MRI community. Diffusion models have recently emerged as a promising solution for MRI reconstruction, as they can generate high-quality samples while maintaining sample diversity. However, the inference process of diffusion models is computationally expensive, requiring thousands of steps to ensure the quality of the generated samples, which can take tens of minutes to complete. To address this issue, we propose a novel fast diffusion model for MRI reconstruction, termed FDMR, which aims to accelerate the inference process and improve reconstruction quality. The FDMR framework consists of two main components: the adversarial training of the denoising diffusion GAN and the three-stage inference framework. The adversarial training process is used to train the denoising diffusion GAN with large steps, learning an unconditional diffusion prior and embedding a deep generative prior. The proposed three-stage inference framework includes fast diffusion generation, early stopped deep generative prior adaptation, and diffusion refinement, aiming to accelerate the inference process and improve the reconstruction quality. Extensive experiments demonstrate that FDMR can achieve superior reconstruction accuracy compared to state-of-the-art diffusion methods, yet it operates 4-10 times faster, enabling the reconstruction within just 8 s.

1. Introduction

Magnetic resonance imaging (MRI) is a non-invasive, radiation-free medical imaging solution that has been widely used in clinical diagnosis. Its high contrast and high-resolution imaging capabilities for soft tissues also make it the gold standard for medical imaging in cardiovascular, brain and other body parts diagnosis [1]. However, MRI scans are often time-consuming, with a single scan lasting from several minutes to over an hour. Long scan times can lead to patient discomfort and motion artifacts, which can degrade image quality [2,3]. Thus, accelerating MRI scans, which reduces scan times by undersampling *k*-space data, is essential for improving patient experience and clinical efficiency [4–7]. However, undersampling *k*-space data at high acceleration factors violates the Nyquist sampling theorem, leading to severe image aliasing artifacts. Image reconstruction from highly undersampled data is a challenging inverse problems, gaining significant attention in the MRI community [8,9].

Optimization methods based on compressed sensing theory [10] have been widely used for MRI reconstruction from undersampled data. These methods exploit prior information of MRI images, such as sparsity [11], low-rankness [12], manifolds [13], and dictionary learning [14], to construct reconstruction models. However, these methods often require manual design parameters and constraints, accompanied by time-consuming iterative procedures. To address these challenges, deep learning methods have emerged as the mainstream for MRI reconstruction [15,16], leveraging large datasets to learn the inherent features of MRI images and achieve high-quality reconstruction. However, the generalization of deep learning models to different undersampling patterns and acceleration factors remains a challenge. Most deep learning methods require specifying the undersampling pattern during training, and retraining is necessary when the undersampling pattern changes, which can be time-consuming and resource-intensive [17,18].

More recently, diffusion models have attracted attention in MRI reconstruction due to their ability to generate high-quality samples while maintaining sample diversity [19]. These models can effectively learn the distribution of data and generate samples that conform to this distribution. Given only a dataset of fully sampled MRI images,

☆ This work is supported by National Natural Science Foundation of China (Grant number: 62501198 and 62371167) and Natural Science Foundation of Heilongjiang (Grant number: YQ2021F005).

* Corresponding authors.
E-mail addresses: huyue@hit.edu.cn (Y. Hu), hitpengli@hit.edu.cn (P. Li).

https://doi.org/10.1016/j.mri.2025.110551
Received 30 May 2025; Received in revised form 21 September 2025; Accepted 22 October 2025
Available online 31 October 2025
0730-725X/© 2025 Elsevier Inc. All rights are reserved, including those for text and data mining, AI training, and similar technologies.

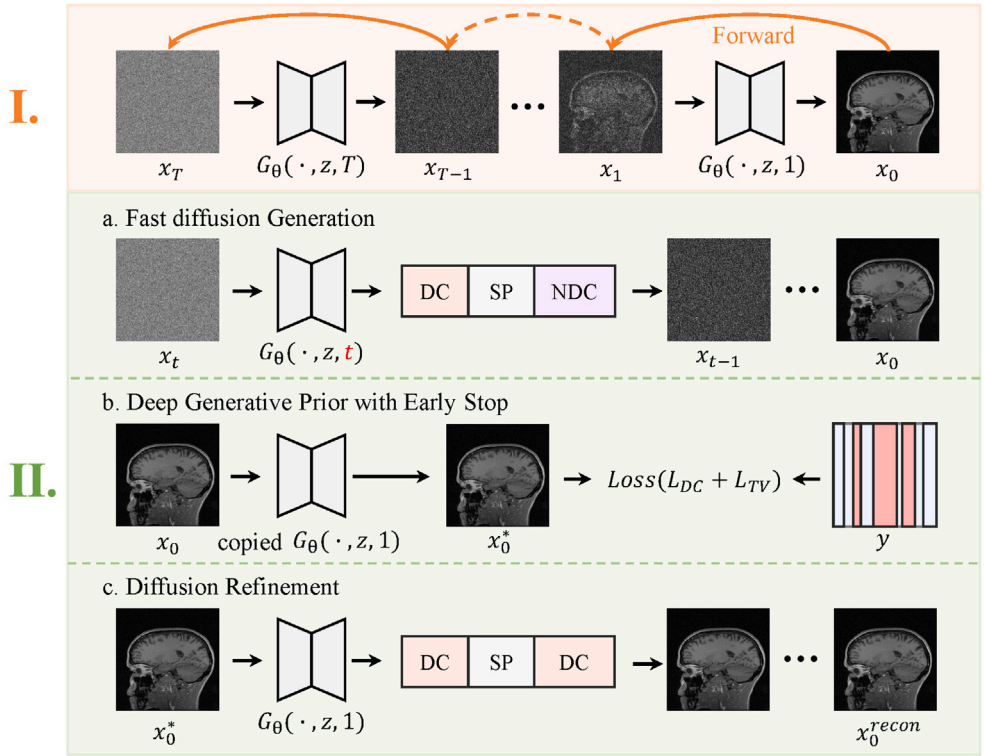

Fig. 1. Illustration of the training (I.) and inference (II.) process of the proposed FDMR framework. (I.) Adversarial training of the denoising diffusion GAN. (II.) Three-stage inference framework (a) Fast diffusion generation: the diffusion model alternates with data consistency correction for reverse diffusion generation, using a dual-consistency data mixing strategy. (b) Early stopped deep generative prior adaptation: the deep generative prior is fine-tuned using data consistency loss and total variation loss. (c) Diffusion refinement: the last step of reverse diffusion is used to refine the image and sharpen the image edges.

diffusion models can learn unconditional data distribution characteristics, termed diffusion priors, that are not influenced by undersampling masks or acceleration factors. This knowledge can then be applied to any undersampling pattern during the inference phase. Recent studies have primarily focused on the alternation between reverse diffusion steps and data consistency correction during the inference process, ensuring consistency between generated images and the acquired k-space data [20–26]. Some research [27] has proposed adding an adaptation phase after reverse diffusion, fine-tuning the diffusion prior using data consistency loss to enhance reconstruction performance. However, these methods usually require lengthy inference processes to obtain high-quality reconstruction results, which can reach thousands of steps and take tens of minutes to complete, limiting their practical applicability.

To fill this gap, we extend our earlier work presented in [28] by proposing a novel fast diffusion framework for MRI reconstruction, termed FDMR, which aims to accelerate the inference process of diffusion models and improve reconstruction quality. Fig. 1 illustrates the overview of the proposed FDMR framework. Specifically, a denoising diffusion GAN [29] is employed to train a fast diffusion model with large step sizes and few steps through an adversarial loss. This model learns a diffusion prior solely from fully sampled MR images and is independent of the undersampling pattern. The embedded GAN in the diffusion process also learns an unconditional data distribution prior [30], termed deep generative prior. To accelerate the inference process, we propose a novel three-stage inference framework: fast diffusion generation, early stopped deep generative prior adaptation, and diffusion refinement. In the first stage, the diffusion prior alternates with data consistency correction for reverse diffusion generation. We introduce a dual-consistency data mixing strategy that separately corrects the clean images generated by the GAN and the noised images of the current diffusion step. In the second stage, the deep generative prior is fine-tuned using data consistency loss and total variation loss to make full use of the undersampled k-space information. An early-stopping strategy is adopted to prevent overfitting. In the third stage, we use the last step of reverse diffusion to refine the image and sharpen the image edges.

Experimental results demonstrate that the proposed FDMR achieves superior reconstruction quality compared to state-of-the-art (SOTA) diffusion-based methods, with a 4–10 times faster inference speed. Extensive experiments confirm the excellent performance and robustness of the proposed FDMR across different undersampling masks, acceleration factors, and datasets.

2. Related work

2.1. Deep learning for accelerated MR imaging

Traditional methods are based on compressed sensing [10] and utilize priors including sparsity [11], low-rankness [12,31], and dictionary learning [14] for undersampled reconstruction [32]. However, recent advancements in computer vision have made deep learning methods the mainstream for tackling undersampling reconstruction tasks. Unlike traditional methods that require the manual design of constraints based on prior information, deep learning methods leverage extensive training data to learn the inherent features of MRI. Jin et al. [33] directly learn the mapping relationship from undersampled images to fully sampled images using U-Net. Chaudhari et al. [34] devised a 3D CNN with residual structures to achieve high-quality knee image reconstruction. Schlemper et al. [35] constructed a deep cascaded CNN for reconstructing zero-filled images. Aghabiglou et al. [36] employed densely connected residual modules to enhance reconstruction performance. Wu et al. [37] proposed a deep integrated network to enhance compressed sensing reconstruction. Additionally, some researchers have

improved deep learning architectures to enhance network performance. Yang et al. [38] designed a deblurring GAN that incorporates perceptual and adversarial losses. Quan et al. [39] introduced RefineGAN, which utilizes a UNet generator and incorporates an MRI denoising cycle loss. Han et al. [40] introduced a data consistency layer to ensure fidelity between the reconstructed images and the undersampled data in the k-space. Zheng et al. [41] achieved improved data fidelity through a two-step data consistency approach. Some research [42] have introduced dual-frequency domain convolutions to learn the frequency features of k-space data, enhancing the reconstruction quality. However, these methods often require specifying the undersampling pattern during training, and retraining is necessary when the undersampling pattern changes, which can be time-consuming and resource-intensive.

2.2. Diffusion model for accelerated MR imaging

Diffusion models have recently gained prominence as a research focus due to their ability to generate high-quality samples while preserving sample diversity [19]. These models directly learn the correlations within data distributions and perform denoising inference in the form of a Markov chain, gradually converting Gaussian noise into image samples. Diffusion models have achieved significant success in various computer vision tasks, and some researchers have introduced them into the field of MRI reconstruction to accelerate the imaging process. Chung et al. [21] introduced a diffusion framework for MRI reconstruction, where a predictor is used to solve stochastic differential equations, followed by a corrector based on Markov chain Monte Carlo sampling, guiding the reverse process. Peng et al. [26] proposed a coarse-to-fine Monte Carlo sampling approach to approximate the optimal reconstruction sample, improving the reconstruction results. Gungor et al. [27] introduced an adaptive diffusion prior method to enhance the performance of MRI cross-domain reconstruction. Korkmaz et al. [43] combined diffusion models with deep unfolding to improve reconstruction quality. Cui et al. [44] utilized self-supervised learning of the diffusion prior and performed conditional Langevin Markov chain Monte Carlo sampling to reconstruct MR images. These methods primarily achieve the reverse process by alternately applying diffusion prior and k-space data correction during inference. Compared to other methods, diffusion models [45,46] often deliver superior reconstruction quality. Nevertheless, their practical application is hindered by computational complexity, which may necessitate thousands of inference steps and lead to prolonged reconstruction times, thereby constraining the broad applicability and feasibility of these approaches.

3. Background

3.1. MRI reconstruction

The MRI acquisition can be formulated by,

$$y = MFx + n, \tag{1}$$

where M represents the undersampling mask for collecting k-space data, F stands for the Fourier transform that converts the image to k-space data, x denotes the distortion-free image, and n is the acquisition noise. The goal of MRI reconstruction is to recover the distortion-free image x from the undersampled k-space data y. However, when the undersampling factor is high, the inverse problem becomes ill-posed, leading to the generation of aliasing artifacts in the reconstructed image.

Based on the compressed sensing theory [10], the MRI reconstruction problem can be formulated as an optimization problem, where the image x is reconstructed by minimizing the following objective function,

$$x^* = min_x \|MFx - y\|_2^2 + R(x, y), \tag{2}$$

where x^* denotes the optimal reconstruction of the distortion-free image x, the first term represents the data consistency, and $R(x, y)$ represents the regularization term, generally designed to promote the sparsity or low-rankness of the MR image. Traditional optimization-based methods set up constraints based on a given data distribution and undersampling mask M to reconstruct x. Conditional deep learning models learn priors from large datasets, but specifying the imaging operator MF is required when training the model. Thus, these models are sensitive to the undersampling pattern and acceleration factor, necessitating retraining when the undersampling pattern changes. Unconditional models, which can learn priors solely from distortion-free images x and robustly reconstruct images across different undersampling masks and acceleration factors, are more suitable and urgently needed for MRI reconstruction.

3.2. Diffusion model

The diffusion model [19] is a type of unconditional generative model that can learn the distribution of data and generate high-quality samples. The model consists of two parts: the forward diffusion process and the reverse denoising process. The forward diffusion process is a Markov chain that gradually adds Gaussian noise to a clean image $x_0 \sim q(x_0)$ in T steps with predefined noise scales, or so-called step sizes, β_t. The forward diffusion process can be formulated as,

$$\begin{aligned} q(x_t|x_{t-1}) &= \mathcal{N}(x_t; \sqrt{1-\beta_t}x_{t-1}, \beta_t \mathbf{I}) \\ q(x_{1:T}|x_0) &= \prod_{t=1}^{T} q(x_t|x_{t-1}). \end{aligned} \tag{3}$$

where $q(x_t|x_{t-1})$ denotes the transition probability distribution from x_{t-1} to x_t at step t, $\mathcal{N}(\cdot)$ denotes a Gaussian distribution with mean and variance specified by its arguments, and $q(x_{1:T}|x_0)$ represents the distribution of the entire diffusion process. β_t is the step size at step t, and $\mathbf{I}$ is the identity matrix. x_T becomes pure Gaussian noise after sufficiently large T steps. Additionally, at any step t, x_t can be related to x_0 by [19],

$$\begin{aligned} x_t &= \sqrt{\overline{\alpha}_t}x_0 + \sqrt{1-\overline{\alpha}_t}\,\epsilon, \quad \epsilon \sim \mathcal{N}(0, I) \\ \overline{\alpha}_t &= \prod_{i=1}^{t} \alpha_i, \quad \alpha_t = 1 - \beta_t. \end{aligned} \tag{4}$$

where α_t is the retention rate of x_{t-1} at step t, and $\overline{\alpha}_t$ is the cumulative retention rate from step 1 to step t.

In the reverse denoising process, the model gradually denoises the Gaussian noise x_T to approximate the empirical data distribution $q(x_0)$. Under the assumption of infinitesimal step size β_t, the reverse transition probability distribution $q(x_{t-1}|x_t)$ takes a Gaussian form [29], which can be predicted by a neural network,

$$p_\theta(x_{t-1}|x_t) = \mathcal{N}(x_{t-1}; \epsilon_\theta(x_t, t), \sigma_t^2 I), \tag{5}$$

where $\epsilon_\theta(x_t, t)$ is the mean term predicted by the neural network with parameter θ, and σ_t^2 is the variance term related to β_t. The diffusion model can be trained by maximizing the evidence lower bound (ELBO) [19], which can be written as matching the true distribution $q(x_{t-1}|x_t)$ with the parameterized denoising model $p_\theta(x_{t-1}|x_t)$. The loss function [29] can be expressed as,

$$\mathcal{L} = -\sum_{t\geq 1} \mathbb{E}_{q(x_t)} \left[D_{KL} \left(q(x_{t-1}|x_t) \parallel p_\theta(x_{t-1}|x_t) \right) \right] + C, \tag{6}$$

where D_{KL} denotes the Kullback–Leibler (KL) divergence, and C contains constant terms. The reverse denoising process is untrackable, and the loss function can be simplified in an alternative form with a tractable distribution according to [47].

Thus, high-quality image samples can be generated from Gaussian noise by the diffusion model through the reverse denoising process, also called the inference process. However, the inference process is

computationally expensive, requiring as many as thousands of reverse denoising steps to ensure the quality of the generated samples, which can take tens of minutes to complete. This limitation hinders the practical application of diffusion models in MRI reconstruction.

4. Proposed fast diffusion model for MRI reconstruction

The proposed fast diffusion model for MRI reconstruction, termed FDMR, aims to enhance the reconstruction quality under high undersampling and accelerate the inference process. The FDMR framework consists of two main components: the adversarial training of the denoising diffusion GAN and the three-stage inference framework. The adversarial training process is used to train the denoising diffusion GAN [29] with large steps, learning an unconditional diffusion prior and embedding a deep generative prior [30]. The proposed three-stage inference framework includes fast diffusion generation, early stopped deep generative prior adaptation, and diffusion refinement, aiming to accelerate the inference process and improve the reconstruction quality. Fig. 1 illustrates the overall FDMR framework, and the details of these components are described in the following sections.

4.1. Adversarial training

The reverse transition probability distribution $q(x_{t-1}|x_t)$ in the diffusion model is often assumed to be Gaussian, which holds when the step size β_t is sufficiently small or the data marginal $q(x_t)$ is Gaussian. As a result, the reverse denoising process generally requires thousands of steps to ensure the quality of the generated samples. To accelerate the diffusion model, the proposed FDMR introduces the denoising diffusion GAN framework [29] with the assumption that T is small and each diffusion step has a larger step size β_t. In addition, a conditional GAN generator $p_\theta(x_{t-1}|x_t)$ is employed to learn the $q(x_{t-1}|x_t)$. The diagram of the denoising diffusion GAN in training is shown in Fig. 1.I.

Specifically, the denoising diffusion GAN consists of a generator and a discriminator, both of which are time-dependent. The generator first predicts the distortion-free target image x_0^t and then generates the noised image x_{t-1} using the posterior distribution $q(x_{t-1}|x_t, x_0^t = G_\theta(x_t, z, t))$, i.e.,

$$p_\theta(x_{t-1}|x_t) = \int p(z) q(x_{t-1}|x_t, x_0^t = G_\theta(x_t, z, t)) dz, \tag{7}$$

The generator $G_\theta(x_t, z, t)$ takes the current sample x_t and the time step t as conditions, and a latent variable of a normal distribution $z \sim p(z) = \mathcal{N}(z; 0, I)$ as input, predicting the target distribution x_0^t. The generator is trained by minimizing the adversarial loss and the mean squared error (MSE) loss between the target distribution x_0^t and the real image distribution x_0. The loss functions of the generator is formulated as,

$$\min_\theta \sum_{t>=1} \mathbb{E}_{q(x_t)} \mathbb{E}_{p_\theta(x_{t-1}|x_t)} [-log(D_\phi(x_{t-1}, x_t, t))] + \|x_0^t - x_0\|_2^2. \tag{8}$$

where $D_\phi(x_{t-1}, x_t, t)$ denotes the discriminator that takes pairs of samples at previous and current time steps and determines whether x_{t-1} is a real denoised version of x_t. In existing diffusion models [29], the generator is trained solely based on the adversarial loss, which makes it challenging to train the network and requires a long time to reach equilibrium between the generator and discriminator. To address this issue, we introduce the MSE loss term in the generator training process, which establishes a direct linkage between the generator and the actual data distribution, thereby expediting the training process.

The discriminator is trained by minimizing the adversarial loss between the true x_{t-1} and the fake x_{t-1} generated by the generator. The loss function of the discriminator is formulated as,

$$min_\phi \sum_{t>=1} \mathbb{E}_{q(x_t)} (\mathbb{E}_{q(x_{t-1}|x_t)} [-log(D_\phi(x_{t-1}, x_t, t))] + \mathbb{E}_{p_\theta(x_{t-1}|x_t)} [-log(1 - D_\phi(x_{t-1}, x_t, t))]), \tag{9}$$

where in the first term the true x_{t-1} is sampled from the forward process, and in the second term the fake x_{t-1} is sampled from the generator $p_\theta(x_{t-1}|x_t)$.

Notably, the undersampling operator is not incorporated in the adversarial training of the diffusion model, which allows the model to learn an unconditional MRI prior distribution that is independent of any specific undersampling pattern, as shown in Fig. 1.I. Such an unconditional MRI prior, referred to as the diffusion prior, can be well adapted to different undersampling masks and acceleration factors during the inference stage, making the diffusion model more robust and versatile for MRI reconstruction. In addition, the generator of the GAN can learn the distribution of the high-quality data, which can be used as a deep generative prior [30] to further enhance the reconstruction quality. The diffusion prior and deep generative prior can be combined with specific undersampled k-space data during the inference stage to achieve high-quality MRI reconstruction.

4.2. Three-stage inference

The proposed FDMR framework introduces a three-stage inference process to accelerate the diffusion model and enhance the reconstruction quality. The three stages are fast diffusion generation, early stopped deep generative prior adaptation, and diffusion refinement, as shown in Fig. 1.II. The details of these stages are described in the following sections.

4.2.1. Fast diffusion generation

The reverse diffusion process of existing diffusion models generates samples from Gaussian noise without any guidance, resulting in random samples that may not correspond well to the target images. This is particularly problematic for MRI reconstruction, where the generated samples should be consistent with the acquired undersampled k-space data. To address this issue, we propose a fast diffusion generation framework that leverages known deterministic undersampled data to guide the random reverse diffusion process as much as possible, making the model generate samples as consistent as possible with the expectations. The fast diffusion generation framework is illustrated in Fig. 1.II.a. Specifically, at each reverse diffusion step, the predicted target distribution x_0^t from the GAN generator is additionally processed by the data consistency (DC), sample prior (SP), and noise-mixed data consistency (NDC) layers to obtain the next-step x_{t-1}. The DC layer corrects the predicted x_0^t using the known k-space data y at the undersampled locations, which can be formulated as,

$$\hat{x}_0^t = F^{-1}((1 - M)Fx_0^t + My), \tag{10}$$

where F and F^{-1} denote the Fourier transform and inverse Fourier transform, respectively, and M is the undersampling mask. The DC layer corrects the predicted x_0^t by replacing the k-space of x_0^t at the undersampled locations with the observed k-space data y, while keeping the remaining k-space data unchanged. The SP layer directly uses the posterior distribution to generate the next-step noised image, i.e., $\hat{x}_{t-1} \sim q(\hat{x}_{t-1}|x_t, \hat{x}_0^t)$. The NDC layer further enhances the data consistency by blending known sampling data with Gaussian noise to guide the reverse diffusion process. The NDC layer can be formulated as,

$$x_{t-1} = F^{-1}((1 - M)F\hat{x}_{t-1} + \sqrt{\overline{\alpha}_{t-1}}\ y + MF(\sqrt{1 - \overline{\alpha}_t}\ \epsilon)). \tag{11}$$

where $\overline{\alpha}_{t-1}$ is the mean of x_{t-1} in k-space, and $F(\sqrt{1 - \overline{\alpha}_t}\ \epsilon)$ is the variance of x_{t-1} in k-space, where ϵ is the Gaussian noise. The image domain variance is $\sqrt{1 - \overline{\alpha}_t}$, consistent with the forward diffusion process (4). The NDC layer blends known sampling data with Gaussian noise to further guide the reverse diffusion process, making the generated samples closer to the target image. The detailed workflow of the DC and NDC layers is shown in Fig. 2.

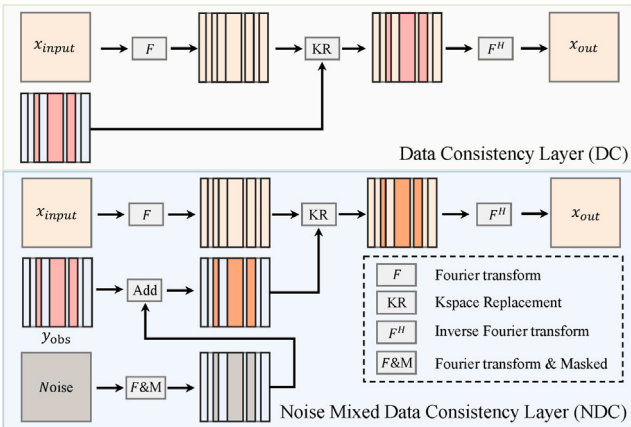

Fig. 2. The detailed workflow of the DC and NDC layers. (a) Data Consistency Layer (DC): corrects the predicted real image samples using known k-space data. (b) Noise-Mixed Data Consistency Layer (NDC): corrects the intermediate noisy samples during diffusion inference by incorporating k-space data mixed with Gaussian noise.

4.2.2. Early stopped deep generative prior adaptation

In the proposed fast diffusion generation stage, a dual-consistency data mixing strategy is introduced to separately correct the clean images generated by the GAN and the noised images of the current diffusion step, making the generated samples closely mirror the target image. However, data at the unsampled k-space points is entirely generated by the diffusion prior based on the distribution of the training dataset, without any interaction or connection to the sampled data y. The stability and quality of the reconstructed MR images are still limited by the unconditional diffusion prior. Additional guidance from the undersampled k-space data is required to further enhance the reconstruction quality.

To fill this gap, we propose an early stopped deep generative prior (DGP) adaptation stage to fine-tune the generated image based on the undersampled k-space data, as shown in Fig. 1.II.b. Specifically, a replica of the generator trained in the diffusion process is utilized to fine-tune the generated image x_0 based on the undersampled k-space data y, making it closer to the fully sampled target. The DGP treats the trained GAN generator as the CNN model in the deep image prior (DIP) framework [48], enabling the simultaneous use of the data distribution prior learned by the generator and the local correlation prior of the CNN, which results in superior reconstruction outcomes. The loss function for this stage is constructed using data consistency loss and total variation (TV) loss, and the input noise z and parameters θ of the generator are optimized, i.e.,

$$\theta^*, z^* = \arg\min_{\theta,z} \| M F(G_\theta(x_0, z, 1)) - y \|_2^2 + \lambda \| G_\theta(x_0, z, 1) \|_{TV}. \tag{12}$$

where λ is the weight of the TV loss.

Notably, the DGP is obtained through previous adversarial training of the GAN, and works as a DIP to enhance the data distribution prior. Thus, the optimal iterative steps of the DGP are challenging to determine. To address this issue, we adopt an early stopping strategy [27], leveraging the strongest data distribution prior provided by the generator and mitigating potential overfitting problems that may arise from the DGP method. The early stopped DGP training is conducted for a relatively small number of iterations to quickly obtain the adjusted image $x_0^* = G_{\theta^*}(x_0, z^*, 1)$, which is then used for the subsequent diffusion refinement stage.

4.2.3. Diffusion refinement

The early stopped DGP training is conducted for a relatively small number of iterations, which does not guarantee the optimal stopping moment for DGP. The loss in (12) is dominated by the undersampled k-space y and the TV of the generated image, which may also result in the image being overly smooth and exhibiting blocky effects [49]. To solve these limitations, we propose a diffusion refinement stage to further enhance the image quality and sharpen the image edges, as shown in Fig. 1.II.c.

The diffusion refinement stage shares similarities with the fast diffusion generation stage but introduces several key distinctions: (1) a small-step diffusion model is trained separately for the diffusion refinement stage, which has more steps T and smaller β_t; (2) only the last step of this model's reverse diffusion is utilized to refine the generated image x_0^*, leveraging its demonstrated ability to enrich image details and sharpen edges effectively; (3) the noise mixing strategy in the original NDC layer becomes redundant and is replaced by a degenerated DC layer for simplicity and efficiency. The diffusion refinement stage mainly enhances image details and sharpens image edges, making the generated samples more visually appealing and realistic. Although the reverse diffusion process of the small-step diffusion model will inevitably be slower, the inference time will not increase significantly since only the last step is needed for minor diffusion refinement.

The diffusion refinement stage is similar to the fast diffusion generation stage, but with a few distinctions: (1) the diffusion refinement stage is conducted using the last step of the reverse diffusion ($t = 1$) to refine the generated image x_0^* obtained from the first two stages, aiming to overcome its excessive smoothing and blocky effects; (2) the diffusion refinement stage mainly enhances image details and sharpens image edges, and the noise mixing strategy in the original NDC layer is no longer applicable, thus degenerating into a DC layer; (3) a small-step diffusion model is trained separately for the diffusion refinement stage, which has more steps T and smaller β_t, and the last step of this model's reverse diffusion is utilized to refine x_0^*. The last step of the small-step diffusion model was demonstrated to have a strong refinement capability, which can enrich the image details and sharpen the image edges. Although the reverse diffusion process of this small-step diffusion model will inevitably be slower, the inference time will not increase significantly since we only need the last step for minor diffusion refinement.

4.3. Implemented details

The proposed FDMR framework is implemented using PyTorch framework on a workstation with an Intel Xeon E5-2690 CPU and an Nvidia Quadro GV100 32G GPU. The FDMR framework is trained using the Adam optimizer with a learning rate of 1e-4. The number of diffusion steps T in the adversarial training is set to 16, and the training iterations for the DGP adaptation are set to 50. In the third stage of inference, we train an additional 1000-step diffusion and use its final step to perform a 30-step reverse diffusion to refine the image. The FDMR framework is trained with a batch size of 4. The noise level σ_t^2 is derived from a predefined, monotonically decreasing schedule, which is designed to align with the underlying distribution characteristics of the model. For further details, the specific schedule can be referenced in [29].[1]

5. Experiments

In this section, we begin by introducing the datasets and baselines utilized in our experiments, and the experimental results are summarized and analyzed following. Finally, we conduct an ablation study to investigate the effectiveness of our FDMR framework.

[1] https://github.com/NVlabs/denoising-diffusion-gan/blob/

Table 1
Quantitative results of experiments on CC-359 with Random sampling pattern. The metrics are reported as mean ± std over the inference dataset.

	Random (5×)			Random (10×)			Inference
Methods	PSNR	SSIM	NMSE	PSNR	SSIM	NMSE	time(s)
ZF	21.40 ± 4.12	0.7628 ± 0.0598	0.1690 ± 0.1015	19.42 ± 3.78	0.6960 ± 0.0612	0.2579 ± 0.1568	–
Unet	31.01 ± 1.19	0.9371 ± 0.0159	0.0136 ± 0.0034	29.35 ± 1.53	0.9169 ± 0.0202	0.0205 ± 0.0069	–
Swinnet	31.97 ± 1.08	0.9474 ± 0.0137	0.0109 ± 0.0025	29.44 ± 0.80	0.9243 ± 0.0180	0.0192 ± 0.0041	–
DBGAN	31.38 ± 1.09	0.9383 ± 0.0159	0.0124 ± 0.0030	29.57 ± 1.26	0.9201 ± 0.0202	0.0191 ± 0.0056	–
AdaDiff	34.11 ± 1.69	0.9732 ± 0.0076	0.0070 ± 0.0028	31.10 ± 1.64	0.9540 ± 0.0131	0.0139 ± 0.0050	100.41
DiffRecon	37.28 ± 1.47	0.9820 ± 0.0047	0.0033 ± 0.0011	33.35 ± 1.30	0.9659 ± 0.0089	0.0080 ± 0.0023	27.78
FDMR	**37.51 ± 1.41**	**0.9828 ± 0.0045**	**0.0031 ± 0.0009**	**33.72 ± 0.97**	**0.9686 ± 0.0079**	**0.0072 ± 0.0015**	**7.64**

5.1. Setup

5.1.1. Datasets

We utilized two MRI datasets for evaluation: the Calgary-Campinas-359 dataset (CC-359) [50] and the IXI dataset.

The **CC-359**[2] dataset consists of multi-vendor, multi-field strength MR T1-weighted brain volume imaging data. It provides fully sampled brain MR images acquired on clinical MR scanners, with image dimensions of 256 × 256. We utilized 24 volumes from the CC-359 dataset for training and 10 volumes for inference.

The **IXI** dataset[3] is a multi-modal brain dataset that provides T1, T2, and PD-weighted images. Here, we used the T2-weighted images from 578 subjects in the IXI dataset. We processed these images into 2D slices with the size of 256 × 256, and randomly split them, with 90% of the data used for training and 10% for inference.

5.1.2. Baselines

We compared the proposed FDMR with five SOTA MRI reconstruction methods, i.e, two end-to-end reconstruction networks (Unet [51], Swinnet [52]), one generative adversarial network (DBGAN [53]), and two diffusion models (DiffRecon [26], AdaDiff [27]). All compared methods were trained and optimized according to the parameters provided in their papers. In addition, the method that fills zeros into the missing k-space points and directly applies the inverse Fourier transform to reconstruct the image was also used as the baseline, denoted as zero-filling (ZF).

5.1.3. Experimental settings

We evaluated the proposed FDMR using two common undersampling masks [49], i.e., the variable density random sampling mask (Random) and the pseudo-radial sampling mask (Radial). Two acceleration factors, 5× and 10×, were employed for each mask. The performance of the methods was evaluated using three metrics: peak signal-to-noise ratio (PSNR), structural similarity index (SSIM), and normalized mean square error (NMSE). The inference time was measured on an Nvidia Quadro GV100 32G GPU.

5.2. Experimental results

Table 1 reports the reconstruction metrics on the CC-359 dataset with the Random mask. From the results, it is evident that the proposed FDMR realizes the best performance in terms of all metrics, outperforming the other SOTA reconstruction networks. The total average inference time is approximately 7.64 s per image, with ±0.17 s variability across different samples due to the jitter of the hardware. Specifically, the average inference time for each stage of FDMR is 1.82 s for fast diffusion generation, 3.97 s for early stopped DGP adaptation, and 1.85 s for diffusion refinement. Compared with the SOTA diffusion models, FDMR can achieve superior performance while maintaining a significantly shorter inference time, running 13.3× faster than AdaDiff and 3.6× faster than DiffRecon. The CC-359 results with the Radial mask are shown in Table 2, while the IXI results with the Random and Radial masks are shown in Tables 3 and 4, respectively. The results demonstrate that FDMR consistently outperforms the other methods across all datasets and undersampling masks, achieving the best performance in terms of PSNR, SSIM, and NMSE.

Figs. 3 and 4 depict the reconstruction results of a specific image sample from CC359 and IXI inference datasets under Random and Radial undersampling masks with a 10× acceleration, presenting the reconstructed images and the corresponding error maps. The undersampling masks are also shown next to the error maps. The quantitative metrics of the selected sample are listed in the reconstructed images. From the error maps, we could find that the end-to-end deep learning methods, Unet, Swinnet, and DBGAN, produce significant errors in the regions of brain folds, while the diffusion models maintain relatively

Table 2
Quantitative results of experiments on CC-359 with Radial sampling pattern. The mean metrics over the inference dataset are reported.

	Radial(5×)			Radial(10×)		
Methods	PSNR	SSIM	NMSE	PSNR	SSIM	NMSE
ZF	23.62	0.8297	0.0962	18.93	0.6747	0.2931
Unet	32.21	0.9528	0.0105	29.14	0.9211	0.0213
Swinnet	33.42	0.9594	0.0079	30.66	0.9341	0.0146
DBGAN	33.92	0.9649	0.0079	29.99	0.9254	0.0173
AdaDiff	34.30	0.9773	0.0066	29.95	0.9371	0.0182
DiffRecon	37.55	0.9840	0.0031	32.62	0.9595	0.0095
FDMR	**37.97**	**0.9853**	**0.0027**	**32.81**	**0.9604**	**0.0090**

Table 3
Quantitative results on IXI with Radial sampling pattern. The mean metrics over the inference dataset are reported.

	Radial(5×)			Radial(10×)		
Methods	PSNR	SSIM	NMSE	PSNR	SSIM	NMSE
ZF	26.48	0.5888	0.0765	21.81	0.4366	0.2239
Unet	36.26	0.9838	0.0070	34.08	0.9759	0.0127
Swinnet	36.40	0.9779	0.0075	33.88	0.9733	0.0132
DBGAN	35.19	0.9803	0.0099	33.69	0.9734	0.0139
AdaDiff	39.94	0.9915	0.0036	35.36	0.9832	0.0095
DiffRecon	43.06	0.9927	0.0019	36.65	0.9834	0.0073
FDMR	**43.39**	**0.9953**	**0.0017**	**36.67**	**0.9867**	**0.0070**

Table 4
Quantitative results on IXI with Random sampling pattern. The mean metrics over the inference dataset are reported.

	Random(5×)			Random(10×)		
Methods	PSNR	SSIM	NMSE	PSNR	SSIM	NMSE
ZF	24.70	0.5219	0.1132	22.77	0.4571	0.1747
Unet	35.18	0.9798	0.0099	33.76	0.9737	0.0137
Swinnet	34.29	0.9704	0.0119	32.80	0.9677	0.0169
DBGAN	36.37	0.9832	0.0076	33.20	0.9715	0.0154
AdaDiff	39.47	0.9902	0.0039	37.00	0.9878	0.0068
DiffRecon	42.89	0.9921	0.0019	38.17	0.9862	0.0055
FDMR	**43.24**	**0.9948**	**0.0017**	**38.32**	**0.9899**	**0.0051**

[2] https://sites.google.com/view/calgary-campinas-dataset/
[3] http://brain-development.org/ixi-dataset/

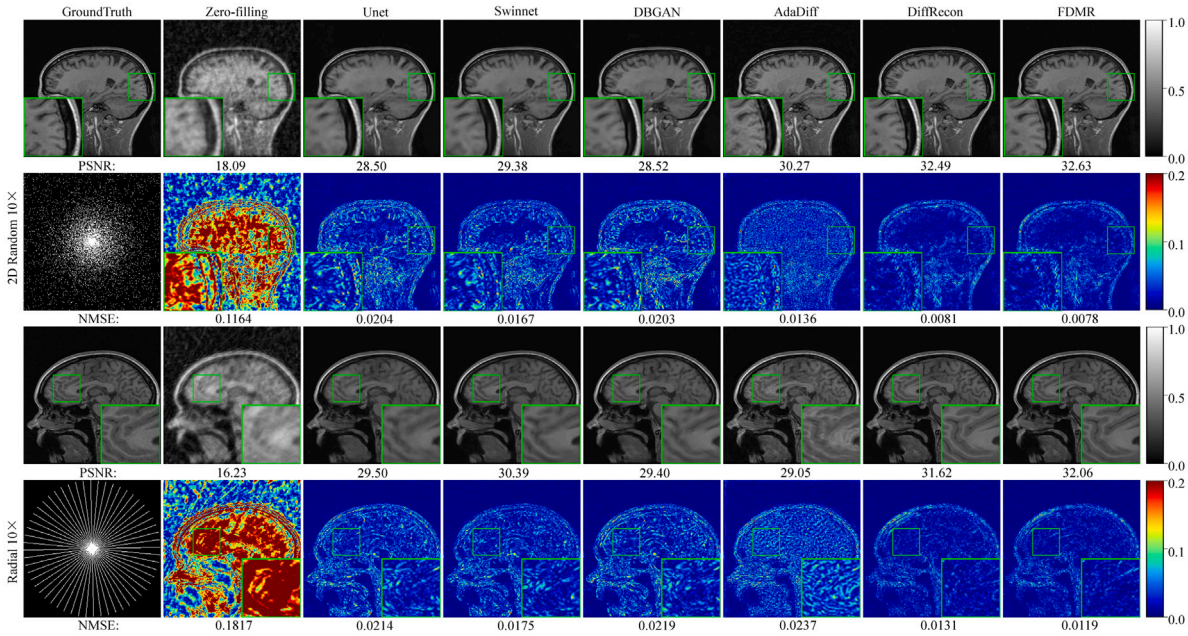

Fig. 3. Comparison of different methods in terms of reconstruction results on the CC-359 dataset 10× acceleration with Random and Radial sampling patterns.

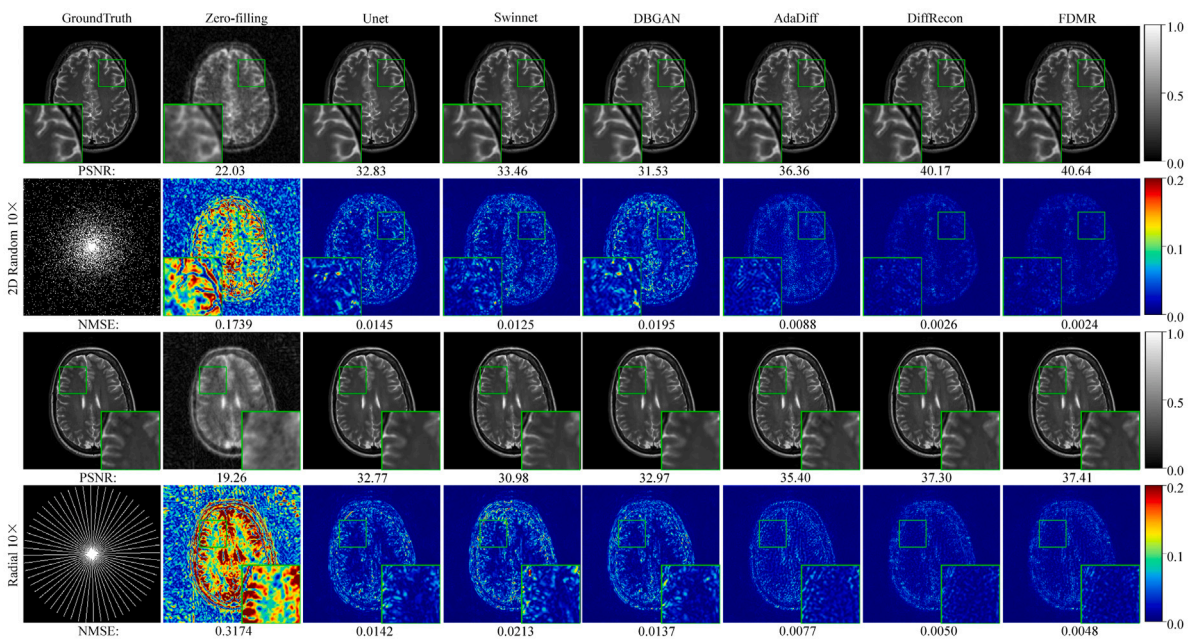

Fig. 4. Comparison of different methods in terms of reconstruction results on the IXI dataset 10× acceleration with Random and Radial sampling patterns.

uniform errors across the entire brain region. We could observe that the end-to-end networks tend to generate images with blurred and smoothed details, leading to poor performance in depicting fine structures. In contrast, FDMR and other diffusion-based methods produce images with sharp and clear details, highlighting the exceptional capability of diffusion models in MRI reconstruction tasks. Compared with all other methods, FDMR generates the least error, distinctly displaying superior performance in both detailed brain tissues and the overall brain structure. The results demonstrate that the proposed FDMR framework can achieve high-quality MRI reconstruction under high undersampling rates and accelerate the inference process significantly.

6. Discussion

In this section, we conduct ablation studies to investigate the impact of different inference stage combinations, the hyperparameters of the inference stages, and the effectiveness of the proposed fast diffusion generation and diffusion refinement stages.

6.1. Impact of inference stage combinations

To investigate the impact of three inference stages in FDMR—fast diffusion generation, early-stopped deep generative prior adaptation,

Table 5
Comparison of different combinations of inference stages. The fast diffusion generation, early-stopped deep generative prior adaptation, and diffusion refinement stages are denoted by ①, ②, and ③, respectively.

Methods	PSNR	SSIM	NMSE
ZF	19.54	0.7359	0.2017
ZF+①	23.76	0.7598	0.0764
ZF+②	25.77	0.8973	0.0481
ZF+①②	30.73	0.9411	0.0153
ZF+①③	33.84	0.9639	0.0075
ZF+②③	36.21	0.9787	0.0043
ZF+①②③	36.55	0.9795	0.0041

and diffusion refinement, we conducted experiments using one data sample from the CC359 inference collection and sampled with a 5x accelerated Random mask.

Table 5 displays inference results for different stage combinations, where ZF stands for the zero-filling method to provide a lower bound for reconstruction accuracy, and we utilized circled number annotations to denote the corresponding inference stages. Results show that reconstructions using only the first or second stage were suboptimal, primarily because utilizing either diffusion prior or deep generative prior alone does not fully leverage data information. When both stages are combined, reconstruction quality significantly improves, highlighting the complementarity of the two priors and the importance of adaptive adjustments based on undersampled k-space data. Moreover, the third stage, diffusion refinement, further enhances reconstruction quality by reducing smoothing and blocky effects in images, enhancing detail and edge clarity, thereby yielding reconstructions closest to real images. Additionally, when only the first stage is missing, the decline in reconstruction quality is less pronounced compared to missing only the second stage, suggesting some prior information overlap between the diffusion refinement and fast diffusion generation, given both involve reverse diffusion processes. To sum up, we believe the three inference stages of FDMR collaborate to enhance reconstruction outcomes.

6.2. Impact of inference stage parameters

In FDMR, each inference stage requires iterations, such as the inverse diffusion steps in the first and third stages and the number of training iterations in the second stage. To investigate the impact of these parameters, we conducted ablation studies on the number of diffusion steps in the fast diffusion generation stage, the number of training steps in the early-stopped deep generative prior adaptation stage, and the number of diffusion steps in the diffusion refinement stage.

Table 6 demonstrates the impact of the number of fast diffusion steps in the first stage, revealing that performance improves with increasing step lengths. We can observe that the reconstruction quality initially increases and then stabilizes as the step length increases, indicating that the diffusion model can better adapt to the undersampled k-space data with more steps. However, the improvement diminishes as the step length exceeds a certain threshold, suggesting that the diffusion model may overfit the data with excessive steps. Considering the trade-off between reconstruction quality and inference time, we set the step length to 16.

Table 7 shows the effect of training steps in the second stage. Note that when the number of training steps is set to 0, the model directly uses the generated image from the first stage for the subsequent diffusion refinement. The results show that the second stage plays a crucial role in enhancing the reconstruction quality, with the performance improving as the number of training steps increases. However, the results also show that the performance stabilizes and even decreases after a certain number of training steps, indicating that the model may overfit the data with excessive training steps. Thus, we recommend setting the number of training steps to 50, which balances reconstruction quality and efficiency.

Table 6
The impact of different diffusion steps in the fast diffusion generation stage.

steps	PSNR	SSIM	NMSE
4	34.63	0.9651	0.0063
8	34.99	0.9727	0.0057
12	36.06	0.9771	0.0045
16	36.21	0.9791	0.0044
24	36.32	0.9799	0.0044
32	36.46	0.9796	0.0041

Table 7
Tuning the number of training steps for early-stopped deep generative prior adaptation.

steps	PSNR	SSIM	NMSE
0	33.02	0.9535	0.0091
25	37.13	0.9798	0.0035
50	37.16	0.9814	0.0035
75	37.01	0.9817	0.0036
100	36.89	0.9821	0.0037

Table 8
The impact of different diffusion steps in the diffusion refinement stage.

steps	PSNR	SSIM	NMSE
10	36.18	0.9746	0.0044
20	36.88	0.9784	0.0037
30	37.31	0.9803	0.0034
40	37.58	0.9814	0.0032

Table 8 illustrates the impact of diffusion steps in the third stage. In this stage, only the last step of inverse diffusion is used to refine the reconstructed image. Therefore, a larger number of diffusion steps enhances the refinement capability of the final step, and also results in a lower noise level at the last step, thereby eliminating the interference from its own denoising ability. Consequently, the reconstruction quality is higher. Considering efficiency, we set its step length to 30. It is worth mentioning that, when inference time can be appropriately relaxed, more diffusion steps in the first and third stages will further improve reconstruction quality, allowing for flexible adjustments based on actual requirements.

6.3. Generalizability under different contrasts

In our experiments, we conducted experiments to evaluate the performance of our method on T1-weighted brain MR images from two datasets. To further assess the generalizability of our proposed FDMR framework across different MRI contrasts, we extended our evaluation to include PD-weighted brain MR images from the IXI dataset. The FDMR model was trained on T1-weighted brain MR images as described in Section 4.1, and then directly applied to reconstruct PD-weighted brain MR images without any additional fine-tuning or retraining. Fig. 5 shows the reconstruction results of our FDMR model on PD-weighted brain MR images from the IXI dataset. The 5× variable density random sampling mask (Random) was used in this experiment. Compared with quantitative metrics reported in Table 4, the PSNR, SSIM and NMSE scores of our FDMR model on PD-weighted brain MR images from the IXI dataset are slightly lower than those on T1-weighted images, which is expected due to the inherent differences in image contrast and features between T1 and PD-weighted images. Nevertheless, the FDMR model still achieves satisfactory reconstruction performance on PD-weighted images, demonstrating its robustness and adaptability to different MRI contrasts.

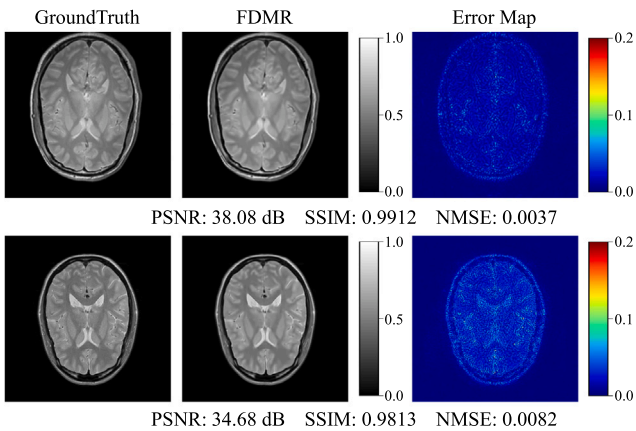

Fig. 5. The reconstruction results of our FDMR model on PD-weighted brain MR images from the IXI dataset. The FDMR model was trained on T1-weighted brain MR images. The 5× variable density random sampling mask (Random) was used in this experiment.

6.4. Limitations and future work

While this work has demonstrated the efficacy of FDMR for brain MRI, several limitations present avenues for future investigation. First, although FDMR exhibits superior performance on the evaluated neuroimaging datasets, its generalizability to other anatomical regions — such as cardiac or abdominal imaging — and to other imaging modalities remains unverified and warrants further validation. Second, the proposed three-stage inference process, designed to leverage the unique characteristics of the MRI reconstruction task, yields empirically compelling results but would benefit from a more rigorous theoretical framework to fully elucidate and optimize its operational mechanisms. Finally, the present implementation utilizes a fixed number of diffusion steps, which may limit adaptability across diverse scenarios. Future work should therefore focus on extending FDMR to a broader range of medical imaging applications, establishing a comprehensive theoretical foundation for the inference pipeline, and developing adaptive diffusion strategies that dynamically tailor the number of steps to the features of the input data.

7. Conclusion

In this paper, we proposed a fast diffusion MRI reconstruction (FDMR) framework that integrates a diffusion model with a deep generative prior to achieve high-quality MRI reconstruction with fast inference speed. A denoising diffusion GAN was introduced to learn the diffusion prior and deep generative prior, and a three-stage inference process was designed to accelerate the diffusion model and enhance the reconstruction quality. Extensive experiments on two MRI datasets demonstrated that FDMR outperforms SOTA MRI reconstruction methods in terms of PSNR, SSIM, and NMSE, while maintaining significantly shorter inference times. Compared to the SOTA diffusion models, FDMR achieves 4-10× faster inference speed, making it more practical for real-time MRI reconstruction. Ablation studies were conducted to investigate the effectiveness of the three inference stages in FDMR, and the results demonstrated that the three stages collaborate to enhance reconstruction outcomes. In future work, we plan to explore the application of FDMR in other medical imaging tasks and investigate the potential of FDMR in real-time MRI reconstruction for clinical applications.

CRediT authorship contribution statement

Guijiao Zhao: Writing – review & editing, Supervision, Data curation, Conceptualization. **Chen Zhou:** Writing – original draft, Visualization, Validation, Software, Methodology, Formal analysis, Data curation. **Jianxing Liu:** Supervision, Conceptualization. **Yue Hu:** Writing – review & editing, Funding acquisition, Conceptualization. **Peng Li:** Writing – review & editing, Writing – original draft, Validation, Supervision, Software, Methodology, Investigation, Formal analysis, Conceptualization.

Declaration of competing interest

The authors declare the following financial interests/personal relationships which may be considered as potential competing interests: Peng Li and Yue Hu report financial support was provided by National Natural Science Foundation of China. Yue Hu reports financial support was provided by Natural Science Foundation of Heilongjiang Province. If there are other authors, they declare that they have no known competing financial interests or personal relationships that could have appeared to influence the work reported in this paper.

References

[1] Jin Y, Yang G, Fang Y, Li R, Xu X, Liu Y, Lai X. 3D PBV-Net: an automated prostate MRI data segmentation method. Comput Biol Med 2021;128:104160.
[2] Zbontar J, Knoll F, Sriram A, Murrell T, Huang Z, Muckley MJ, Defazio A, Stern R, Johnson P, Bruno M, et al. fastMRI: An open dataset and benchmarks for accelerated MRI. 2018, arXiv preprint arXiv:1811.08839.
[3] Zhou B, Zhou SK. DuDoRNet: learning a dual-domain recurrent network for fast mri reconstruction with deep T1 prior. In: Proceedings of the IEEE/CVF conference on computer vision and pattern recognition. 2020, p. 4273–82.
[4] Chen Y, Xiao T, Li C, Liu Q, Wang S. Model-based convolutional de-aliasing network learning for parallel MR imaging. In: Medical image computing and computer assisted intervention–mICCAI 2019: 22nd international conference, shenzhen, China, October 13–17, 2019, proceedings, part III 22. Springer; 2019, p. 30–8.
[5] Aggarwal HK, Mani MP, Jacob M. MoDL: Model-based deep learning architecture for inverse problems. IEEE Trans Med Imaging 2018;38(2):394–405.
[6] Wang G, Ye JC, De Man B. Deep learning for tomographic image reconstruction. Nat Mach Intell 2020;2(12):737–48.
[7] Feng C-M, Yan Y, Wang S, Xu Y, Shao L, Fu H. Specificity-preserving federated learning for MR image reconstruction. IEEE Trans Med Imaging 2022.
[8] Hu Y, Li P, Chen H, Zou L, Wang H. High-quality MR fingerprinting reconstruction using structured low-rank matrix completion and subspace projection. IEEE Trans Med Imaging 2021;41(5):1150–64.
[9] Yang AC, Kretzler M, Sudarski S, Gulani V, Seiberlich N. Sparse reconstruction techniques in magnetic resonance imaging: methods, applications, and challenges to clinical adoption. Invest Radiol 2016;51(6):349–64.
[10] Haldar JP, Hernando D, Liang Z-P. Compressed-sensing MRI with random encoding. IEEE Trans Med Imaging 2010;30(4):893–903.
[11] He J, Liu Q, Christodoulou AG, Ma C, Lam F, Liang Z-P. Accelerated high-dimensional MR imaging with sparse sampling using low-rank tensors. IEEE Trans Med Imaging 2016;35(9):2119–29.
[12] Zhang X, Guo D, Huang Y, Chen Y, Wang L, Huang F, Xu Q, Qu X. Image reconstruction with low-rankness and self-consistency of k-space data in parallel MRI. Med Image Anal 2020;63:101687.
[13] Li P, Ji Y, Hu Y. Improved MRF reconstruction via structure-preserved graph embedding framework. IEEE Trans Image Process 2024;33:5989–6001. http://dx.doi.org/10.1109/TIP.2024.3477980.
[14] Bhatia KK, Price AN, Shi W, Hajnal JV, Rueckert D. Super-resolution reconstruction of cardiac MRI using coupled dictionary learning. In: 2014 IEEE 11th international symposium on biomedical imaging. IEEE; 2014, p. 947–50.
[15] Pal A, Rathi Y. A review and experimental evaluation of deep learning methods for MRI reconstruction. J Mach Learn Biomed Imaging 2022;1.
[16] Chen Y, Schönlieb C-B, Lio P, Leiner T, Dragotti PL, Wang G, Rueckert D, Firmin D, Yang G. AI-based reconstruction for fast MRI—A systematic review and meta-analysis. Proc IEEE 2022;110(2):224–45.
[17] Liu X, Wang J, Liu F, Zhou SK. Universal undersampled mri reconstruction. In: Medical image computing and computer assisted intervention–mICCAI 2021: 24th international conference, strasbourg, France, September 27–October 1, 2021, proceedings, part VI 24. Springer; 2021, p. 211–21.
[18] Korkmaz Y, Dar SU, Yurt M, Özbey M, Cukur T. Unsupervised MRI reconstruction via zero-shot learned adversarial transformers. IEEE Trans Med Imaging 2022;41(7):1747–63.
[19] Ho J, Jain A, Abbeel P. Denoising diffusion probabilistic models. Adv Neural Inf Process Syst 2020;33:6840–51.
[20] Jalal A, Arvinte M, Daras G, Price E, Dimakis AG, Tamir J. Robust compressed sensing mri with deep generative priors. Adv Neural Inf Process Syst 2021;34:14938–54.

[21] Chung H, Ye JC. Score-based diffusion models for accelerated MRI. Med Image Anal 2022;80:102479.
[22] Chung H, Sim B, Ye JC. Come-closer-diffuse-faster: Accelerating conditional diffusion models for inverse problems through stochastic contraction. In: Proceedings of the IEEE/CVF conference on computer vision and pattern recognition. 2022, p. 12413–22.
[23] Song Y, Shen L, Xing L, Ermon S. Solving inverse problems in medical imaging with score-based generative models. 2021, arXiv preprint arXiv:2111.08005.
[24] Luo G, Heide M, Uecker M. MRI reconstruction via data driven markov chain with joint uncertainty estimation. 1, 2022, arXiv preprint arXiv:2202.01479.
[25] Xie Y, Li Q. Measurement-conditioned denoising diffusion probabilistic model for under-sampled medical image reconstruction. In: International conference on medical image computing and computer-assisted intervention. Springer; 2022, p. 655–64.
[26] Peng C, Guo P, Zhou SK, Patel VM, Chellappa R. Towards performant and reliable undersampled MR reconstruction via diffusion model sampling. In: International conference on medical image computing and computer-assisted intervention. Springer; 2022, p. 623–33.
[27] Güngör A, Dar SU, Öztürk Ş, Korkmaz Y, Bedel HA, Elmas G, Ozbey M, Çukur T. Adaptive diffusion priors for accelerated MRI reconstruction. Med Image Anal 2023;102872.
[28] Zhou C, Zhang Y, Hu Y. Enhancing undersampled MRI reconstruction performance via denoising diffusion models. In: 2024 IEEE international symposium on biomedical imaging. 2024, p. 1–4. http://dx.doi.org/10.1109/ISBI56570.2024.10635261.
[29] Xiao Z, Kreis K, Vahdat A. Tackling the generative learning trilemma with denoising diffusion gans. 2021, arXiv preprint arXiv:2112.07804.
[30] Pan X, Zhan X, Dai B, Lin D, Loy CC, Luo P. Exploiting deep generative prior for versatile image restoration and manipulation. IEEE Trans Pattern Anal Mach Intell 2021;44(11):7474–89.
[31] Shi Y, Gao Y, Zhang Y, Sun J, Mou X, Liang Z. Spectral CT reconstruction via low-rank representation and region-specific texture preserving Markov random field regularization. IEEE Trans Med Imaging 2020;39(10):2996–3007.
[32] Pramanik A, Aggarwal HK, Jacob M. Deep generalization of structured low-rank algorithms (deep-SLR). IEEE Trans Med Imaging 2020;39(12):4186–97.
[33] Jin KH, McCann MT, Froustey E, Unser M. Deep convolutional neural network for inverse problems in imaging. IEEE Trans Image Process 2017;26(9):4509–22.
[34] Chaudhari AS, Fang Z, Kogan F, Wood J, Stevens KJ, Gibbons EK, Lee JH, Gold GE, Hargreaves BA. Super-resolution musculoskeletal MRI using deep learning. Magn Reson Med 2018;80(5):2139–54.
[35] Schlemper J, Caballero J, Hajnal JV, Price AN, Rueckert D. A deep cascade of convolutional neural networks for dynamic MR image reconstruction. IEEE Trans Med Imaging 2017;37(2):491–503.
[36] Aghabiglou A, Eksioglu EM. MR image reconstruction using densely connected residual convolutional networks. Comput Biol Med 2021;139:105010.
[37] Wu H, Wu Y, Sun L, Cai C, Huang Y, Ding X. A deep ensemble network for compressed sensing mri. In: Neural information processing: 25th international conference, ICONIP 2018, siem reap, cambodia, December 13-16, 2018, proceedings, part i 25. Springer; 2018, p. 162–71.
[38] Yang G, Yu S, Dong H, Slabaugh G, Dragotti PL, Ye X, Liu F, Arridge S, Keegan J, Guo Y, et al. DAGAN: Deep de-aliasing generative adversarial networks for fast compressed sensing MRI reconstruction. IEEE Trans Med Imaging 2017;37(6):1310–21.
[39] Quan TM, Nguyen-Duc T, Jeong W-K. Compressed sensing MRI reconstruction using a generative adversarial network with a cyclic loss. IEEE Trans Med Imaging 2018;37(6):1488–97.
[40] Han Y, Yoo J, Kim HH, Shin HJ, Sung K, Ye JC. Deep learning with domain adaptation for accelerated projection-reconstruction MR. Magn Reson Med 2018;80(3):1189–205.
[41] Zheng H, Fang F, Zhang G. Cascaded dilated dense network with two-step data consistency for MRI reconstruction. Adv Neural Inf Process Syst 2019;32.
[42] Feng C-M, Yang Z, Fu H, Xu Y, Yang J, Shao L. DONet: dual-octave network for fast MR image reconstruction. IEEE Trans Neural Netw. Learn Syst 2021.
[43] Korkmaz Y, Cukur T, Patel V. Self-supervised MRI reconstruction with unrolled diffusion models. 2023, arXiv preprint arXiv:2306.16654.
[44] Cui Z-X, Cao C, Liu S, Zhu Q, Cheng J, Wang H, Zhu Y, Liang D. Self-score: Self-supervised learning on score-based models for mri reconstruction. 2022, arXiv preprint arXiv:2209.00835.
[45] Jo J, Lee S, Hwang SJ. Score-based generative modeling of graphs via the system of stochastic differential equations. In: International conference on machine learning. PMLR; 2022, p. 10362–83.
[46] Tang W, Zhao H. Score-based diffusion models via stochastic differential equations–a technical tutorial. 2024, arXiv preprint arXiv:2402.07487.
[47] Sohl-Dickstein J, Weiss E, Maheswaranathan N, Ganguli S. Deep unsupervised learning using nonequilibrium thermodynamics. In: International conference on machine learning. PMLR; 2015, p. 2256–65.
[48] Ulyanov D, Vedaldi A, Lempitsky V. Deep image prior. In: Proceedings of the IEEE conference on computer vision and pattern recognition. 2018, p. 9446–54.
[49] Lingala SG, Hu Y, DiBella E, Jacob M. Accelerated dynamic MRI exploiting sparsity and low-rank structure: kt SLR. IEEE Trans Med Imaging 2011;30(5):1042–54.
[50] Souza R, Lucena O, Garrafa J, Gobbi D, Saluzzi M, Appenzeller S, Rittner L, Frayne R, Lotufo R. An open, multi-vendor, multi-field-strength brain MR dataset and analysis of publicly available skull stripping methods agreement. NeuroImage 2018;170:482–94.
[51] Ronneberger O, Fischer P, Brox T. U-net: Convolutional networks for biomedical image segmentation. In: Medical image computing and computer-assisted intervention–mICCAI 2015: 18th international conference, munich, Germany, October 5-9, 2015, proceedings, part III 18. Springer; 2015, p. 234–41.
[52] Huang J, Fang Y, Wu Y, Wu H, Gao Z, Li Y, Ser JD, Xia J, Yang G. Swin transformer for fast MRI. Neurocomputing 2022;493:281–304. http://dx.doi.org/10.1016/j.neucom.2022.04.051.
[53] Liu X, Du H, Xu J, Qiu B. DBGAN: A dual-branch generative adversarial network for undersampled MRI reconstruction. Magn Reson Imaging 2022;89:77–91.